Work Order ID 70525

Friday, June 10, 2011 11:42:13 AM

Item ID: D3443-043 **Accept** **Setup Start**

Revision ID: **Stop**

Item Name: Strut Weldment Assembly

Start Date: 6/10/2011 **Start Qty:** 2.00 **Cust Item ID:**

Required Date: 6/15/2011 **Req'd Qty:** 2.00 **Customer:**

Reference:

Run Start

Approvals: **Process Plan:** N **Date:** 11-06-10 **Tooling:** _____ **Date:** _____

Stop

QC: _____ **Date:** _____ **SPC (Y/N):** _____ **Date:** _____

Sequence ID/ Work Center ID	Operation Description	Set Up/ Run Hours	Tool ID	Tool #	Plan Code	Accept Qty	Reject Qty	Reject Number	Insp. Stamp
Draw Nbr / **Revision Nbr**									
D3443 / Rev C									
100	Large Fab	0.00							
Large Fab	**Memo**	0.00							
Large Fab	Weld assembly as per dwg D3443								
110	QC9- Inspect visual per QSI004- Fusion Welds	0.00							
QC	**Memo**	0.00							
Quality Control									
120	QC5- Inspect part completeness to step on W/O	0.00							
QC	**Memo**	0.00							
Quality Control									

EL 11-8-25

PC 11-08-30

δ 11/05/31

+4

Dart Aerospace Ltd

W/O:		WORK ORDER CHANGES					
DATE	STEP	PROCEDURE CHANGE	By	Date	Qty	Approval Chief Eng / Prod Mgr	Approval QC Inspector

Part No: _____ **PAR #:** _____ **Fault Category:** _____ **NCR:** Yes No **DQA:** _____ **Date:** _____

Resolution: _____ **Disposition:** _____ **QA: N/C Closed:** _____ **Date:** _____

NCR:		WORK ORDER NON-CONFORMANCE (NCR)						
DATE	STEP	Description of NC Section A	Corrective Action Section B			Verification Section C	Approval Chief Eng	Approval QC Inspector
			Initial Chief Eng	Action Description Chief Eng	Sign & Date			

NOTE: Date & initial all entries

H:\fFORMS\Quality Assurance\approved QA\NCRWO RevE

Work Order ID 70525

Friday, June 10, 2011 11:42:13 AM

Item ID: D3443-043 **Accept** **Setup Start** **Stop**

Revision ID:

Item Name: Strut Weldment Assembly

Start Date: 6/10/2011 **Start Qty:** 2.00 **Cust Item ID:**

Required Date: 6/15/2011 **Req'd Qty:** 2.00 **Customer:**

Reference:

Run Start **Stop**

Approvals: **Process Plan:** _____ **Date:** _____ **Tooling:** _____ **Date:** _____

QC: _____ **Date:** _____ **SPC (Y/N):** _____ **Date:** _____

Sequence ID/ Work Center ID	Operation Description	Set Up/ Run Hours	Tool ID	Tool #	Plan Code	Accept Qty	Reject Qty	Reject Number	Insp. Stamp
130	White Gloss(Ref:4.3.5.2) per QSI005 4.3-Steel	0.00							
Powdercoat	**Memo**	0.00							
Powder Coating	1-Mask holes as per dwg D3443☐START TIME: 1:15 ☐OVEN TEMPERATURE: _____ ☐FINISH TIME 1:45								
M117745	400 01								
140	QC3- Inspect Part Finish	0.00							
QC	**Memo**	0.00							
Quality Control									
150	Identify as per dwg & Stock Location: St	0.00							
Packaging	**Memo** w/o 71990	0.00							
Packaging									

4X ø M 11/08/31

4 ø M 11/08/31

11/09/07

Dart Aerospace Ltd

W/O:		WORK ORDER CHANGES					
DATE	STEP	PROCEDURE CHANGE	By	Date	Qty	Approval Chief Eng / Prod Mgr	Approval QC Inspector

Part No: _____ PAR #: _____ Fault Category: _____ NCR: Yes No DQA: _____ Date: _____

Resolution: _____ Disposition: _____ QA: N/C Closed: _____ Date: _____

NCR:		WORK ORDER NON-CONFORMANCE (NCR)						
DATE	STEP	Description of NC Section A	Corrective Action Section B			Verification Section C	Approval Chief Eng	Approval QC Inspector
			Initial Chief Eng	Action Description Chief Eng	Sign & Date			

NOTE: Date & initial all entries

H:\fFORMS\Quality Assurance\approved QA\NCRWO RevE

Work Order ID 70525

Friday, June 10, 2011 11:42:13 AM

Item ID: D3443-043

Revision ID:

Item Name: Strut Weldment Assembly

Start Date: 6/10/2011 **Start Qty:** 2.00

Required Date: 6/15/2011 **Req'd Qty:** 2.00

Reference:

Accept

Setup Start

Stop

Cust Item ID:

Customer:

Run Start

Stop

Approvals: **Process Plan:** _____ **Date:** _____ **Tooling:** _____ **Date:** _____

QC: _____ **Date:** _____ **SPC (Y/N):** _____ **Date:** _____

Sequence ID/ Work Center ID	Operation Description	Set Up/ Run Hours	Tool ID	Tool #	Plan Code	Accept Qty	Reject Qty	Reject Number	Insp. Stamp
160	QC21- Final Inspection - Work Order Release	0.00					11/9/7		
QC	Memo	0.00							
Quality Control									

MF 11-09-07

Dart Aerospace Ltd

W/O:		WORK ORDER CHANGES					
DATE	STEP	PROCEDURE CHANGE	By	Date	Qty	Approval Chief Eng / Prod Mgr	Approval QC Inspector

Part No: _____ **PAR #:** _____ **Fault Category:** _____ **NCR:** Yes No **DQA:** _____ **Date:** _____

Resolution: _____ **Disposition:** _____ **QA: N/C Closed:** _____ **Date:** _____

NCR:		WORK ORDER NON-CONFORMANCE (NCR)						
DATE	STEP	Description of NC Section A	Corrective Action Section B			Verification Section C	Approval Chief Eng	Approval QC Inspector
			Initial Chief Eng	Action Description Chief Eng	Sign & Date			

NOTE: Date & initial all entries

H:\fFORMS\Quality Assurance\approved QA\NCRWO RevE

Picklist Print

Friday, June 10, 2011 11:42:19 AM

Work Order ID: 70525

Parent Item: D3443-043

Parent Item Name: Strut Weldment Assembly

Start Date: 6/10/2011 **Required Date:** 6/15/2011

Start Qty: 2.00 **Required Qty:** 2.00

Comments: IPP REV. A 05.11.17 NEW ISSUE EC

Component Item ID/ Item Name	Replacement Item ID	Mfg/ Purch	Bin Item	Primary Location	Last Location	Route Seq ID	Unit of Measure	Qty on Hand	Qty per Kit	Total Qty	Qty Issued	Date Issued	Status
D3443-3		Manufactured	No			100	Each	3.0000	1	2	EC	11-8-25	
Clevis													
	B71895 x4			**Location**			**Loc Qty**		**Loc Code**				
				WA022			3						
					69055		3						
D3443-7		Manufactured	No			100	Each	3.0000	1	2	EC	11-8-25	
Tubing													
	B71664x4			**Location**			**Loc Qty**		**Loc Code**				
				WA023			3						
					69056		3						
D3966-4-750		Manufactured	No			100	Each	44.0000	1	2	EC	11-8-25	
Pin, Dowel													
				Location			**Loc Qty**		**Loc Code**				
				ST100			44						
					58711		44			4			

Dart Aerospace Ltd

W/O:		WORK ORDER CHANGES					
DATE	STEP	PROCEDURE CHANGE	By	Date	Qty	Approval Chief Eng / Prod Mgr	Approval QC Inspector

Part No: _____ **PAR #:** _____ **Fault Category:** _____ **NCR:** Yes No **DQA:** _____ **Date:** _____

Resolution: _____ **Disposition:** _____ **QA: N/C Closed:** _____ **Date:** _____

NCR:		WORK ORDER NON-CONFORMANCE (NCR)						
DATE	STEP	Description of NC Section A	Corrective Action Section B			Verification Section C	Approval Chief Eng	Approval QC Inspector
			Initial Chief Eng	Action Description Chief Eng	Sign & Date			

NOTE: Date & initial all entries

H:\fFORMS\Quality Assurance\approved QA\NCRWO RevE

ITEM	QTY -041	P/N	DESCRIPTION
1	X	D3443-041	STRUT WELDMENT ASSEMBLY
2	1	D3443-1	LUG
3	1	D3443-5	TUBING
4	1	D3453-1	CLEVIS
5	1	D3965-4	BEARING, SPHERICAL
6	2	D3966-4-750	PIN, DOWEL

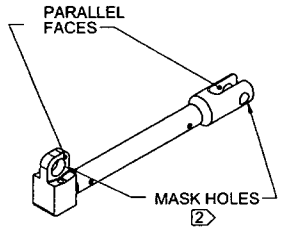

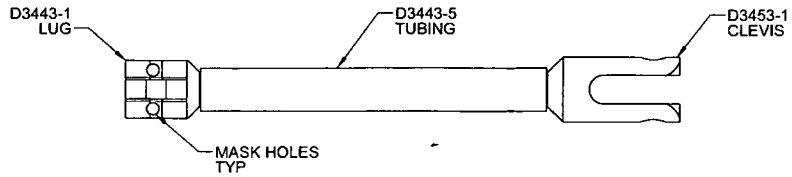

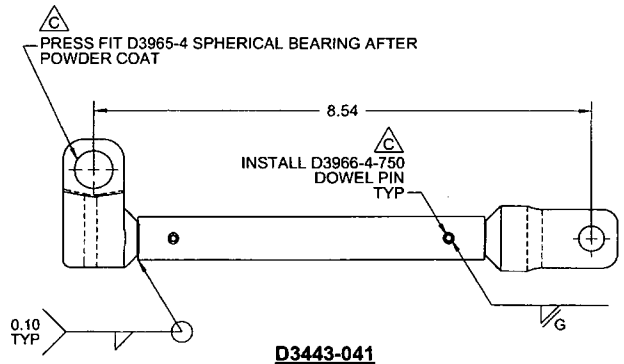

D3443-041

SHOP COPY
RETURN TO
ENGINEERING
UNCONTROLLED COPY
SUBJECT TO AMENDMENT
WITHOUT NOTICE
WORK ORDER
NO. 76525
11-06-10

RELEASED
09/08/25 NP

NOTES:
1) MATERIAL: N/A
C 2) FINISH: POWDER COAT WHITE (4.3.5.2) PER DART QSI 005 4.3
NO POWDER COAT IN HOLES
3) TOLERANCES: PER DART QSI 018 UNLESS OTHERWISE NOTED
4) UNITS: INCHES UNLESS OTHERWISE NOTED
5) BREAK SHARP EDGES: 0.005 TO 0.010 MAX
6) IDENTIFICATION: IDENTIFY WITH DART P/N USING FINE POINT PERMANENT INK MARKER
7) WEIGHT: 1.33 lbs
8) WELD PER DART QSI 004

REV.	DESCRIPTION	BY	DATE
C	DRAWING UPDATED TO CURRENT STANDARDS. REVISED NOTE #2 (ZN A8-1, A8-2); 0.820 WAS 0.720 & 1.43 WAS 1.53 (ZN C2-3); 0.551 WAS 0.451 (ZN C1-3); R0.219 WAS R0.050 (ZN C4-3); D3965-4 WAS SPAENAUR P/N (ZN C6-1, B5-2); D3966-4-750 WAS McMASTER-CARR P/N (ZN B5-1); REF PAR 09-018	RF	09.06.25
B	ADDED -9 PIN; REMOVED BALL PLUNGER; REVISE TOLERANCE; & Ø0.125 WAS #30	RF	05.12.05
A	NEW ISSUE	RF	05.09.02

DESIGN	RF	DART AEROSPACE LTD HAWKESBURY, ONTARIO, CANADA
DRAWN	RF	
CHECKED		DRAWING NO. D3443 — REV. C — SHEET 1 OF 4
MFG. APPR.		
APPROVED		TITLE: STRUT WELDMENT ASSEMBLY — SCALE: NTS
DE APPR.		
DATE	09.06.25	

Dart Aerospace Ltd

W/O:		WORK ORDER CHANGES					
DATE	STEP	PROCEDURE CHANGE	By	Date	Qty	Approval Chief Eng / Prod Mgr	Approval QC Inspector

Part No: _____ PAR #: _____ Fault Category: _____ NCR: Yes No DQA: _____ Date: _____

Resolution: _____ Disposition: _____ QA: N/C Closed: _____ Date: _____

NCR:		WORK ORDER NON-CONFORMANCE (NCR)						
DATE	STEP	Description of NC Section A	Corrective Action Section B			Verification Section C	Approval Chief Eng	Approval QC Inspector
			Initial Chief Eng	Action Description Chief Eng	Sign & Date			

NOTE: Date & initial all entries

H:\fFORMS\Quality Assurance\approved QA\NCRWO RevE

ITEM	QTY -043	P/N	DESCRIPTION
1	X	D3443-043	STRUT WELDMENT ASSEMBLY
2	1	D3443-3	CLEVIS
3	1	D3443-7	TUBING
4.	1	D3966-4-750	PIN

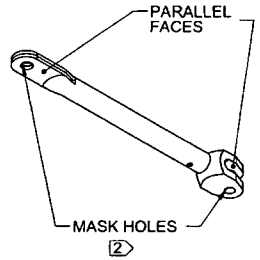

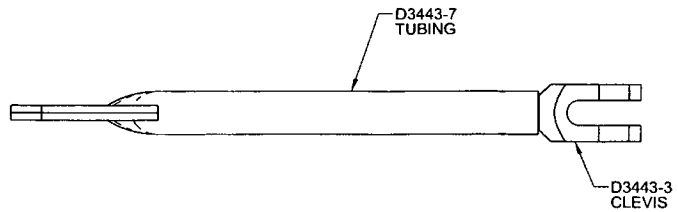

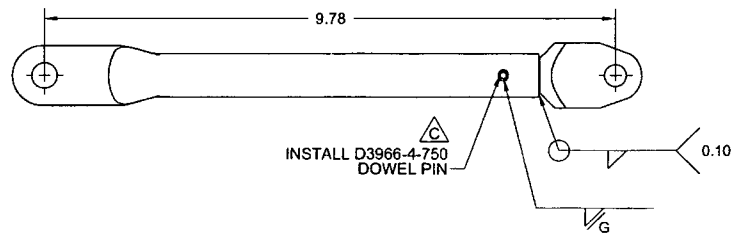

D3443-043

W/O 70525

RELEASED 09/08/25

NOTES:
1) MATERIAL: N/A
C 2) FINISH: POWDER COAT WHITE (4.3.5.2) PER DART QSI 005 4.3
NO POWDER COAT IN HOLES
3) TOLERANCES: PER DART QSI 018 UNLESS OTHERWISE NOTED
4) UNITS: INCHES UNLESS OTHERWISE NOTED
5) BREAK SHARP EDGES: 0.005 TO 0.010 MAX
6) IDENTIFICATION: IDENTIFY WITH DART P/N USING FINE POINT PERMANENT INK MARKER
7) WEIGHT: 0.97 lbs
8) WELD PER DART QSI 004

DESIGN	RF	DART AEROSPACE LTD HAWKESBURY, ONTARIO, CANADA
DRAWN	RF	
CHECKED		DRAWING NO. D3443 — REV. C — SHEET 2 OF 4
MFG. APPR.		
APPROVED		TITLE: STRUT WELDMENT ASSEMBLY — SCALE: NTS
DE APPR.		
DATE	09.06.25	

Dart Aerospace Ltd

W/O:		WORK ORDER CHANGES					
DATE	STEP	PROCEDURE CHANGE	By	Date	Qty	Approval Chief Eng / Prod Mgr	Approval QC Inspector

Part No: _____ **PAR #:** _____ **Fault Category:** _____ **NCR:** Yes No **DQA:** _____ **Date:** _____

Resolution: _____ **Disposition:** _____ **QA: N/C Closed:** _____ **Date:** _____

NCR:		WORK ORDER NON-CONFORMANCE (NCR)						
DATE	STEP	Description of NC Section A	Corrective Action Section B			Verification Section C	Approval Chief Eng	Approval QC Inspector
			Initial Chief Eng	Action Description Chief Eng	Sign & Date			

NOTE: Date & initial all entries

w/o 70525

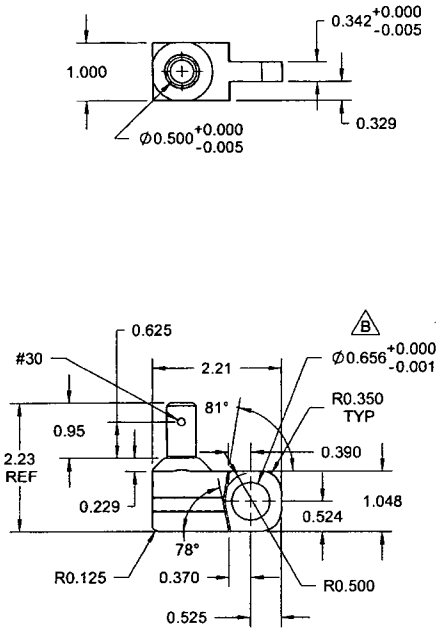

D3443-1 LUG

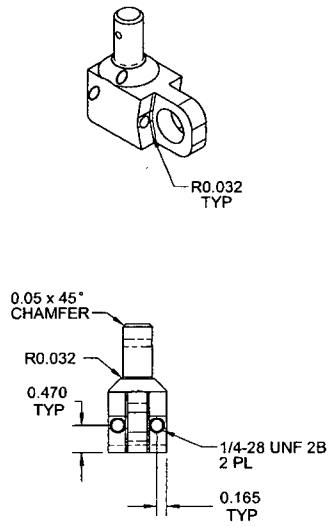

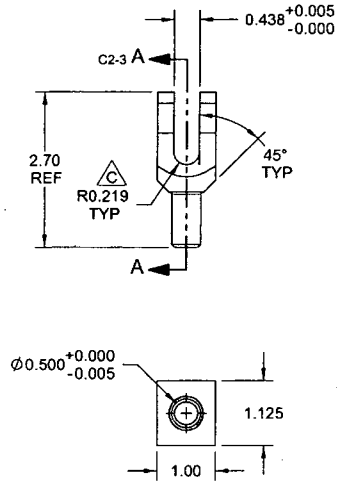

D3443-3 CLEVIS

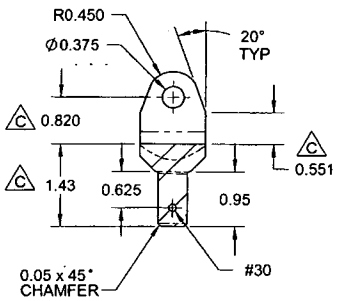

SECTION A-A C4-3

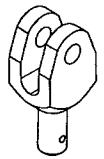

RELEASED 09/08/25

NOTES:
1) MATERIAL: D3443-1 = 17-4 SS PER AMS 5604/5643 (REF DART SPEC M17-4B)
D3443-3 = AISI 304 SS ROUND BAR (REF. DART SPEC M304R)
2) FINISH: NONE
3) TOLERANCES: PER DART QSI 018 UNLESS OTHERWISE NOTED
4) UNITS: INCHES UNLESS OTHERWISE NOTED
5) BREAK SHARP EDGES: 0.005 TO 0.010 MAX
6) IDENTIFICATION: NONE
7) WEIGHT: D3443-1 = 0.50 lbs
D3443-3 = 0.35 lbs

DESIGN	RF	**DART AEROSPACE LTD** HAWKESBURY, ONTARIO, CANADA
DRAWN	RF	
CHECKED		DRAWING NO. D3443 — REV. C — SHEET 3 OF 4
MFG. APPR.		
APPROVED		TITLE STRUT WELDMENT ASSEMBLY — SCALE NTS
DE APPR.		
DATE	09.06.25	

Dart Aerospace Ltd

W/O:		WORK ORDER CHANGES					
DATE	STEP	PROCEDURE CHANGE	By	Date	Qty	Approval Chief Eng / Prod Mgr	Approval QC Inspector

Part No: _____ **PAR #:** _____ **Fault Category:** _____ **NCR:** Yes No **DQA:** _____ **Date:** _____

Resolution: _____ **Disposition:** _____ **QA: N/C Closed:** _____ **Date:** _____

NCR:		WORK ORDER NON-CONFORMANCE (NCR)						
DATE	STEP	Description of NC Section A	Corrective Action Section B			Verification Section C	Approval Chief Eng	Approval QC Inspector
			Initial Chief Eng	Action Description Chief Eng	Sign & Date			

NOTE: Date & initial all entries

H:\fFORMS\Quality Assurance\approved QA\NCRWO RevE

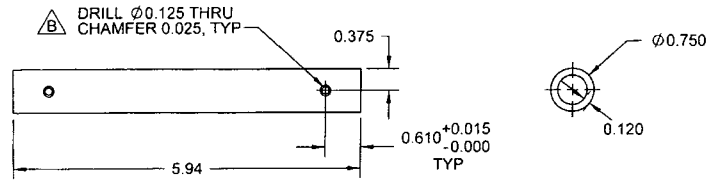

D3443-5 TUBING

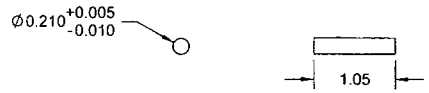

D3443-9 PIN

D3443-9 NOTES:
1) MATERIAL: DELRIN II 150R OR ACETRON GP ACETAL (REF. DART SPEC M-DELRIN-R)
2) FINISH: NONE
3) TOLERANCES: PER DART QSI 018 UNLESS OTHERWISE NOTED
4) UNITS: INCHES UNLESS OTHERWISE NOTED
5) BREAK SHARP EDGFS: 0.005 TO 0.010 MAX
6) IDENTIFICATION: NONE
7) WEIGHT: N/A

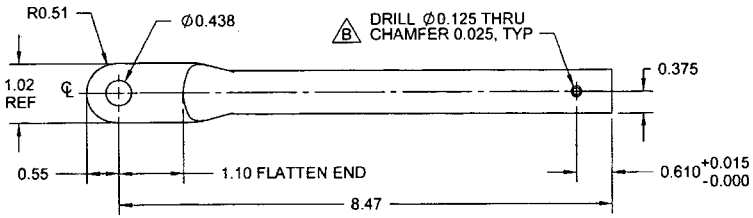

D3443-7 TUBING

w/o 70525

RELEASED 09/08/25

D3443-5/-7 NOTES:
1) MATERIAL: AISI 316/304 SS SEAMLESS TUBING (REF. DART SPEC M304TR0.750W.120)
2) FINISH: NONE
3) TOLERANCES: PER DART QSI 018 UNLESS OTHERWISE NOTED
4) UNITS: INCHES UNLESS OTHERWISE NOTED
5) BREAK SHARP EDGES: 0.005 TO 0.025 MAX
6) IDENTIFICATION: NONE
7) WEIGHT: D3443-5 = 041 lbs
D3443-7 = 0.62 lbs

DESIGN	RF	**DART AEROSPACE LTD** HAWKESBURY, ONTARIO, CANADA
DRAWN	RF	
CHECKED		DRAWING NO. D3443 — REV. C — SHEET 4 OF 4
MFG. APPR.		
APPROVED		TITLE: STRUT WELDMENT ASSEMBLY — SCALE: NTS
DE APPR.		
DATE	09.06.25	

Dart Aerospace Ltd

W/O:		WORK ORDER CHANGES					
DATE	STEP	PROCEDURE CHANGE	By	Date	Qty	Approval Chief Eng / Prod Mgr	Approval QC Inspector

Part No: _____ **PAR #:** _____ **Fault Category:** _____ **NCR:** Yes No **DQA:** _____ **Date:** _____

Resolution: _____ **Disposition:** _____ **QA: N/C Closed:** _____ **Date:** _____

NCR:		WORK ORDER NON-CONFORMANCE (NCR)						
DATE	STEP	Description of NC Section A	Corrective Action Section B			Verification Section C	Approval Chief Eng	Approval QC Inspector
			Initial Chief Eng	Action Description Chief Eng	Sign & Date			

NOTE: Date & initial all entries

H:\fFORMS\Quality Assurance\approved QA\NCRWO RevE